USED ON
—

DWG NO. C-110495

Notes:
1 Material, Housing: PA 4.6 (30% Glass Filled)
Color Black. (UL94V-0)
Contact: Brass
2 Mechanical demands:
Plating plunger: 0.4um Au over 1.4um Ni
Plating body: 0.1um Au over 1.4um Ni .

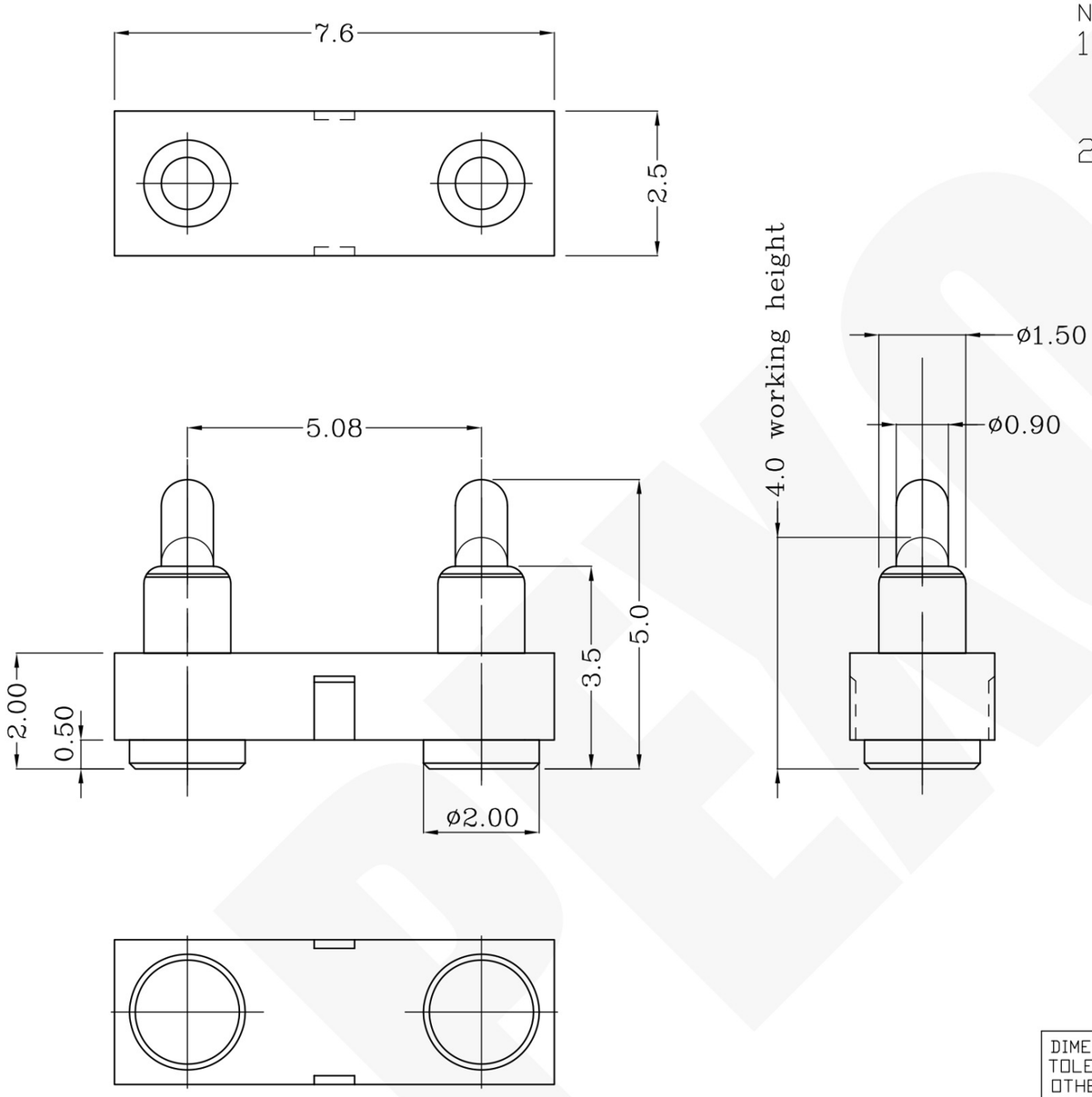

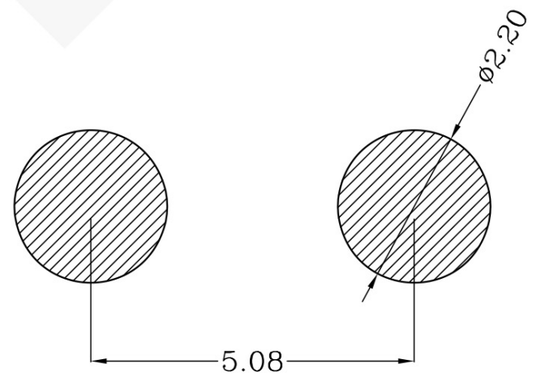

Recommended PCB Layout
Recommended solder paste thickness is 0.10 mm

110495-2
PART NUMBER

DIMENSIONS IN MM
TOLERANCES UNLESS
OTHER SPECIFIED
0 = ±-
0.0 = ±0.15
0.00 = ±0.10
0.000 = ±
ANGLE: ±1°
SURF TEXTURE: 3.2
REMOVE BURRS. BREAK
SHARP EDGES R0.05 MAX
DO NOT SCALE PRINT

MATL	HT TR	FIN
	—	—

DWN	APVD	Pexon
Qin	Lansing	
CHK	REL	
Jim		

NAME BATTERY CONNECTOR 2 POS.
PGC-1.5-5.0-R-2P-5.08PH

SCALE	A4	DWG NO.	SHEET	REV
1:1		C-110495	1 OF 1	A

LTR	REVISION RECORD	APVD	DATE
	NEW		2008/08/19

LOC -
DIST -

THIS INFORMATION IS CONFIDENTIAL AND IS DISCLOSED TO YOU ON CONDITION THAT NO FURTHER DISCLOSURE IS MADE BY YOU TO OTHER THAN PEXON PERSONNEL WITHOUT WRITTEN AUTHORIZATION FROM PEXON LTD.

PEXON

E-mail: sale@pinconnector.com

WhatsApp: +86-13361867201

www.pinconnector.com