USED ON
—

DWG NO. C-110584

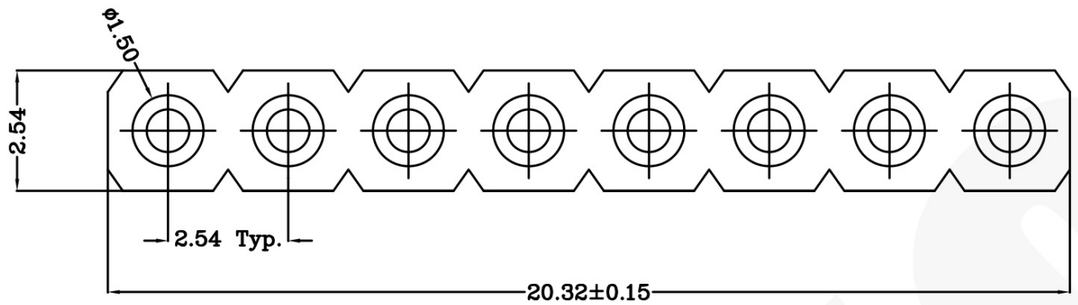

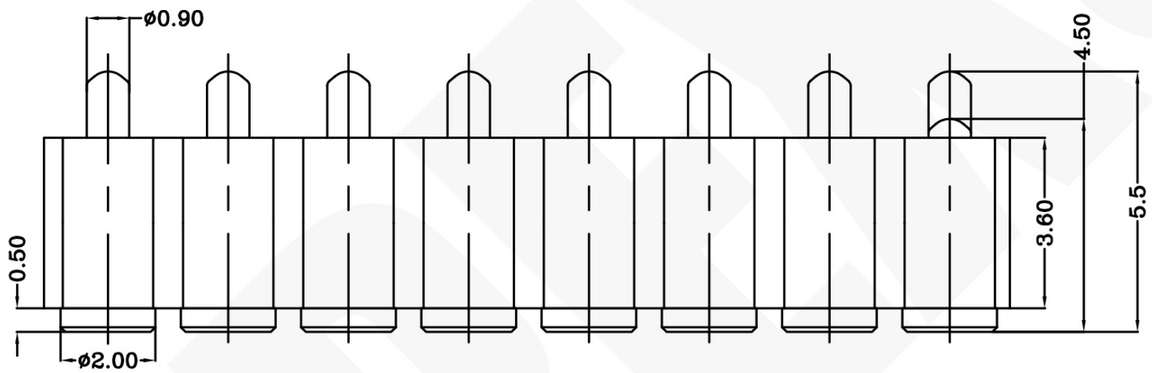

Notes:
1 Material, Housing: PA 4.6 (30% Glass Filled)
Color Black.
Contact: Brass
2 Mechanical demands:
Plating Plunger: 0.4um Au over 1.4um Ni
Plating Body: 0.1um Au over 1.4um Ni.

110584-8
PART NUMBER

DIMENSIONS IN MM
TOLERANCES UNLESS
OTHER SPECIFIED
0 = ±-
0.0 = ±0.15
0.00 = ±0.10
0.000 = ±
ANGLE: ±1°
SURF TEXTURE: 3.2
REMOVE BURRS, BREAK
SHARP EDGES R0.05 MAX
DO NOT SCALE PRINT

MATL 1	HT TR —	FIN —	
DWN Qin	APVD	Pexon	
CHK	REL		
NAME POGO CONNECTOR 8 PIN PGC-1.5-5.5-R-8P-2.54PH			
SCALE 1:1	A4	DWG NO. C-110584	SHEET 1 OF 1	REV A

LTR	REVISION RECORD	APVD	DATE
	NEW		2010/02/01

LOC -
DIST -

THIS INFORMATION IS CONFIDENTIAL AND IS DISCLOSED TO YOU ON CONDITION THAT NO FURTHER DISCLOSURE IS MADE BY YOU TO OTHER THAN PEXON PERSONNEL WITHOUT WRITTEN AUTHORIZATION FROM PEXON LTD.

PEXON

E-mail: sale@pinconnector.com

WhatsApp: +86-13361867201

www.pinconnector.com