Item	Part name	Q'ty/Ea'	Material	Finish
1	HSG	1	High temp.Plastic UL94 V-0 Color Black	————
2	Body	2	Leaded Brass	Gold plating over Nickel plating
3	Plunger	2	Leaded Brass	Gold plating over Nickel plating
4	Spring	2	Stainless steel wire	————
5	CAP	1	High temp.Plastic UL94 V-0 Color Black	————

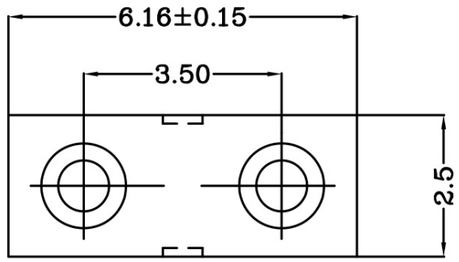

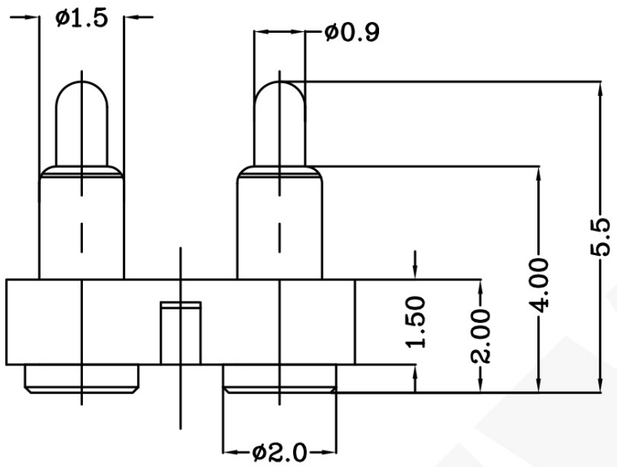

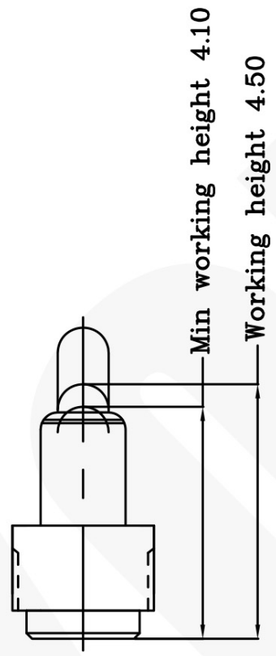

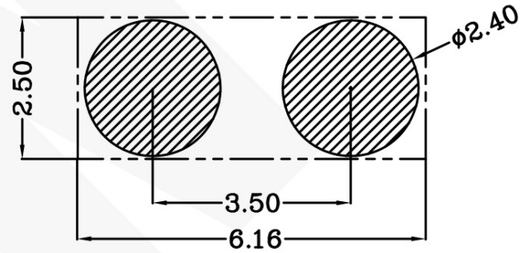

Recommended PCB Layout

Table 1 Mechanical performance		
working height	4.50mm	120±30gf <2.1>
Durability	10000cycle	

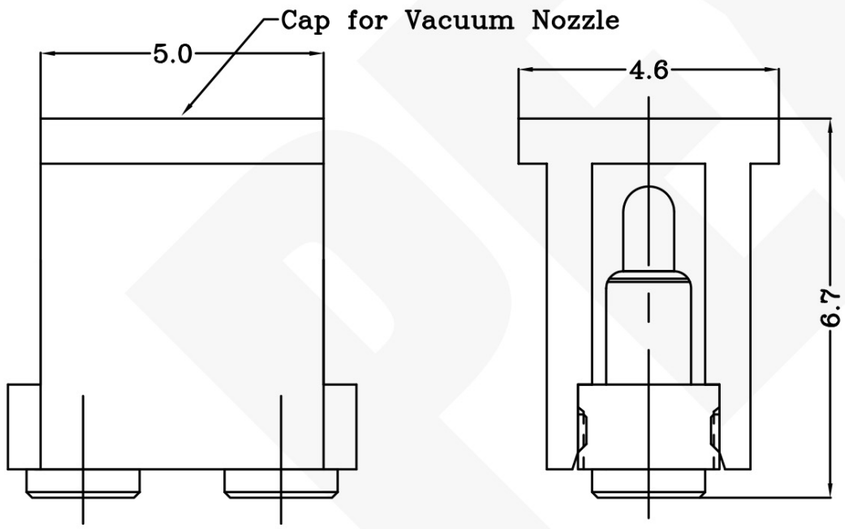

Notes:
1 Demensions shall be interpreted per ASME Y14.5M.
2 Mechanical performance(See the table 1)
<2.1>The force is the average of forces obtained when plunger goes downwards and upwards.
<2.2>Warning: Working height are not permitted to be less than Min working height.
3 Electrical performance
Resistance: 30mOhm Max.
Current rating: 2.0A
4 Packaging Specification comforms to EIA 481
5 RoHS compliant.

100081-2
PART NUMBER

	NEW	2014/06/30
Rev.	Revision record.	Date.

Top-Link Electronics Ltd.
TOLERANCES UNLESS OTHER SPECIFIED
0. = ± –
0.0 = ± 0.15
0.00 = ± 0.10
0.000= ± –
Angle: ±1°
SURF TEXTURE: REMOVE BURRS. BREAK SHARP EDGES R0.05 MAX.DO NOT SCALE PRINT.

Type: Customer drawing	Unit: mm		Weight
DWN: Minos	APVD:	Pexon	
CHK:	REL:		
Name: POGO PIN CONNECTOR			
Scale: 1:1	Size: A4	DWG No. C-100081	Page 1/1	Rev. A

DWN No.: C-100081

DIST ---
DIST ---

THIS INFORMATION IS CONFIDENTIAL AND IS DISCLOSED TO YOU ON CONDITION THAT NO FURTHER DISCLOSURE IS MADE BY YOU TO OTHER THAN PEXON PERSONNEL WITHOUT WRITTEN AUTHORIZATION FROM PEXON LTD.

PEXON

E-mail: sale@pinconnector.com

WhatsApp: +86-13361867201

www.pinconnector.com