THIS INFORMATION IS CONFIDENTIAL AND IS DISCLOSED TO YOU ON CONDITION THAT NO FURTHER DISCLOSURE IS MADE BY YOU TO OTHER THAN PEXON PERSONNEL WITHOUT WRITTEN AUTHORIZATION FROM PEXON LTD.

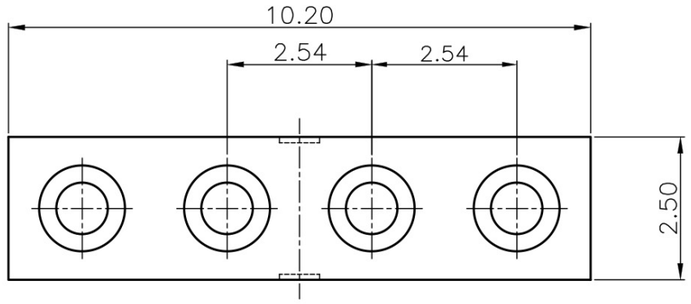

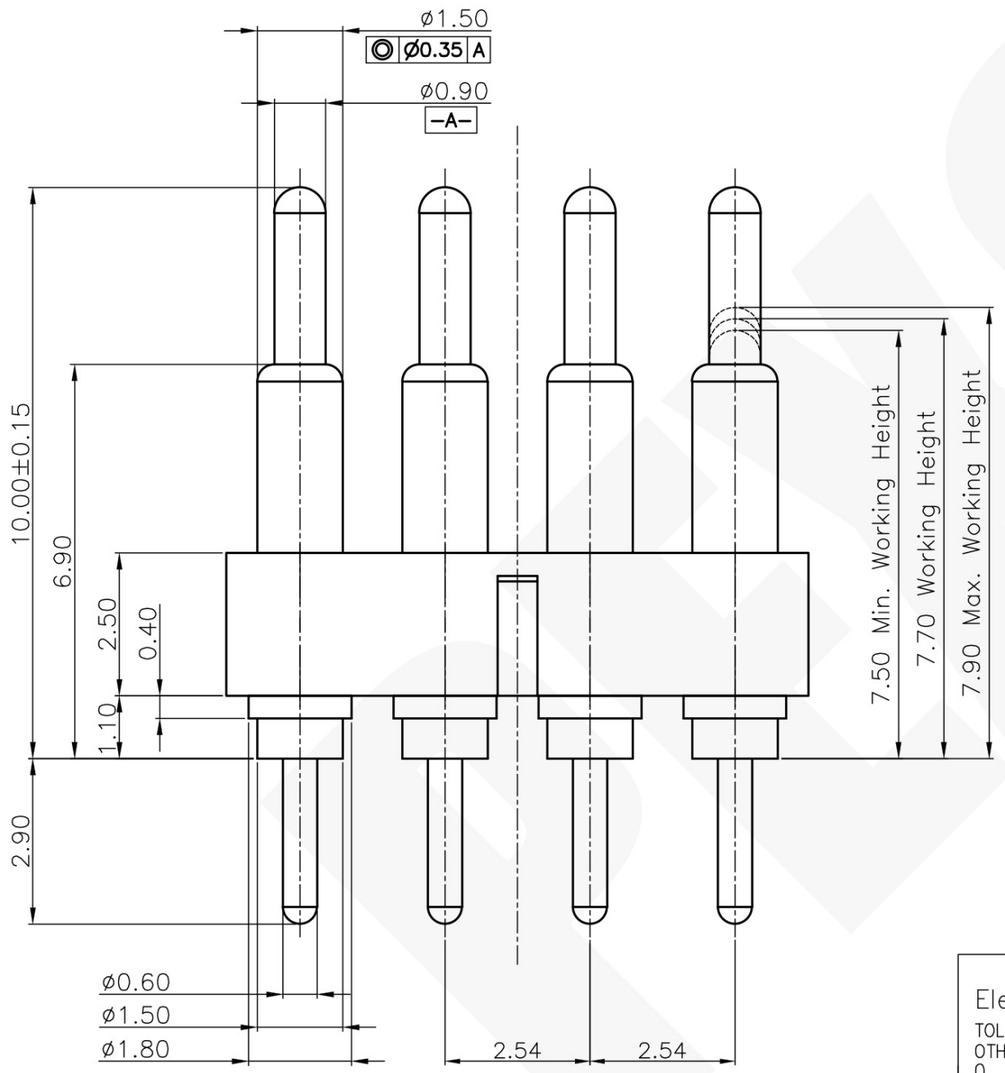

Notes:
1 Dimensions shall be interpreted per ASME Y14.5M
2 Mechanical performance(See the table 1)
<2.1>The force is the average of forces obtained when plunger goes downwards and upwards
<2.2>Warning:Working height are not permitted to be less than Min working height
3 Electrical performance
<3.1>Current rating: 2.0A
<3.2>Voltage rating: 36VAC/DC
<3.3>Dynamic Resistance: 30mOhm Max (between max and min working height)
<3.4>Insulation Resistance: 100MOhm minimum
4 Environmental performance
<4.1>RoHS compliant
<4.2>Salt Spray:48h Min
<4.3>Operating Temperature range: −40°C~+85°C
<4.4>Withstanding Hight Temperature: 260°C/10Sec
5 Packaging: Bag

Table 1:Mechanical performance		
Working Height	7.70mm	110±20gf
Durability	10000 Cycles Min.	

Item	Part Name	Q'TY	Material	Finish
4	Body	1	Leaded Brass	Au plating 0.1um min Ni plating 1.4um min
3	Plunger	1	Leaded Brass	Au plating 0.4um min Ni plating 1.4um min
2	Spring	1	Stainless steel wire	--------
1	Housing	1	High temp.Plastic; UL94 V−0 Color Black	--------

Item	Revision record	Date
XA	New Release	2016.11.21

Top−Link Electronics Ltd.

TOLERANCES UNLESS OTHER SPECIFIED
0. = ± −
0.0 = ± 0.15
0.00 = ± 0.10
0.000= ± −
Angle: ±1°
SURF TEXTURE:
REMOVE BURRS.
BREAK SHARP EDGES R0.05 MAX.DO NOT SCALE PRINT.

Type: Customer drawing		Unit: mm	Pexon
DWN: Wanki	APVD:		
CHK:	REL:		
NAME: Pogo PIN Connnector			
Scale: 1:1	Size: A4	Part NO.: 10110041814	Page: 1/1	Rev: XA

PEXON

E-mail: sale@pinconnector.com

WhatsApp: +86-13361867201

www.pinconnector.com