USED ON
—

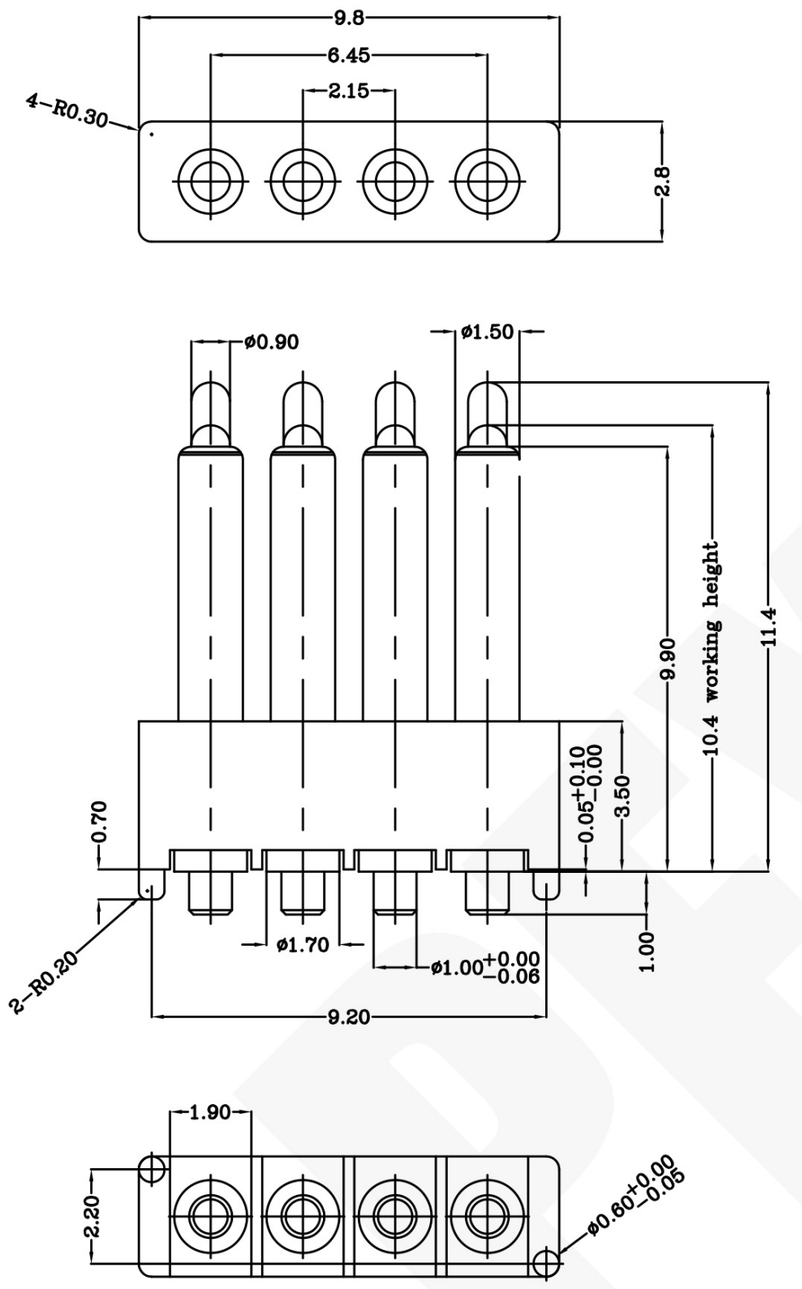

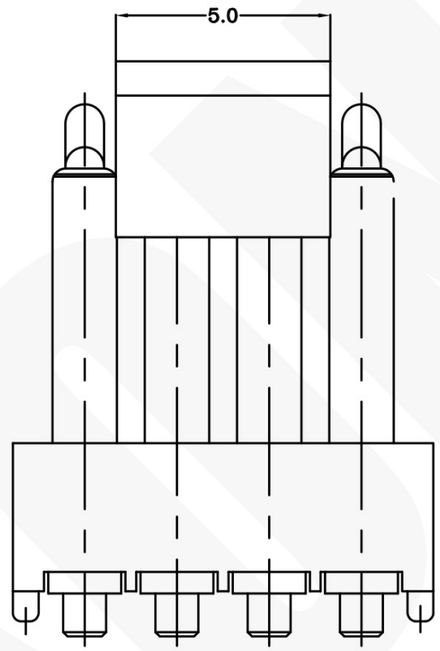

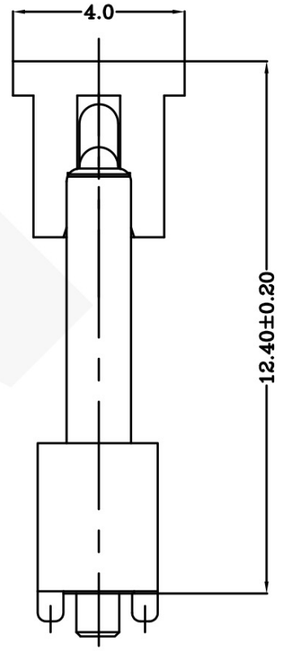

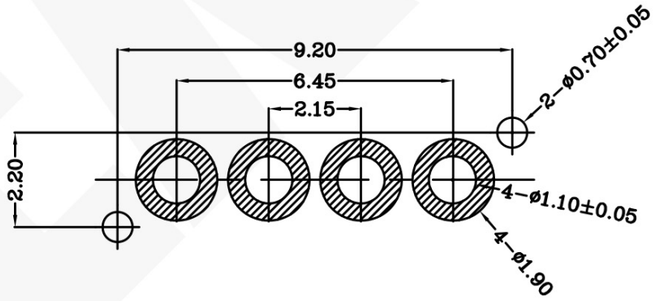

Recommended solder paste thickness is 0.10mm
Recommended PCB Layout

Notes:
1 Material, Housing: PA 4.6 (30% Glass Filled)
Color Black.
Contact: Brass
2 Mechanical demands:
Plating Plunger: 0.5Um Au over 1.5um Ni
Plating Body: 0.1Um Au over 1.4um Ni.
Spring force: Min 20gf with 0.3mm stroke
110±20 gf with 1.0mm stroke.
Resistance: Max. 25 mOhm at working point
Full stroke: 1.4mm

DWG NO. C-100078

THIS INFORMATION IS CONFIDENTIAL AND IS DISCLOSED TO YOU ON CONDITION THAT NO FURTHER DISCLOSURE IS MADE BY YOU TO OTHER THAN PEXON PERSONNEL WITHOUT WRITTEN AUTHORIZATION FROM PEXON LTD.

LOC	DIST
-	-

LTR	REVISION RECORD	APVD	DATE
	Add remark		2008/01/07

DIMENSIONS IN MM
TOLERANCES UNLESS OTHER SPECIFIED
0 = ±-
0.0 = ±0.15
0.00 = ±0.10
0.000 = ±
ANGLE: ±1°
SURF TEXTURE: 3.2
REMOVE BURRS. BREAK SHARP EDGES R0.05 MAX
DO NOT SCALE PRINT

MATL 1	HT TR —	FIN —	100078-4 PART NUMBER
DWN Benny	APVD Lansing	Pexon	
CHK Andy	REL		
NAME POGO 4P PGC-1.7-11.4-R-4P-2.15PH			
SCALE 1:1	A4	DWG NO. C-100078	SHEET 1 OF 1	REV F

D C B A

4 3 2 1

PEXON

E-mail: sale@pinconnector.com

WhatsApp: +86-13361867201

www.pinconnector.com