USED ON
—

DWG NO. C-100267

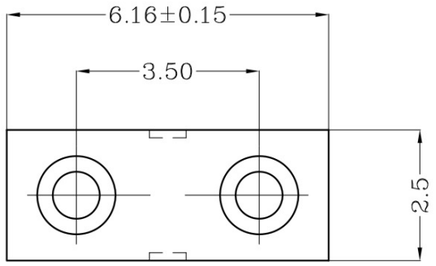

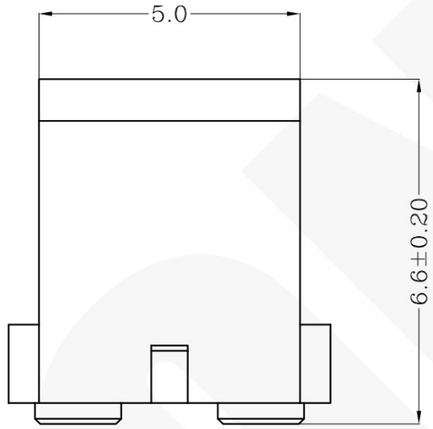

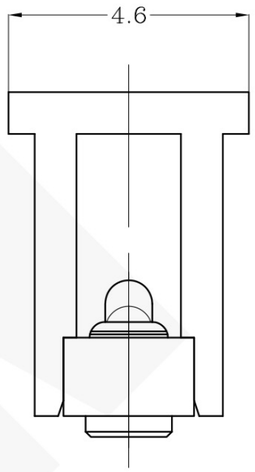

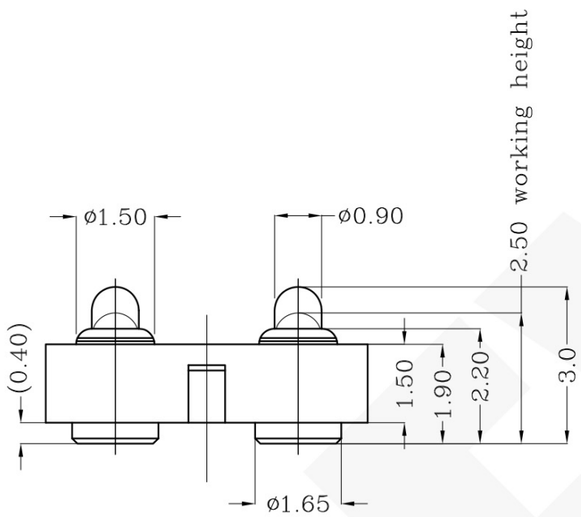

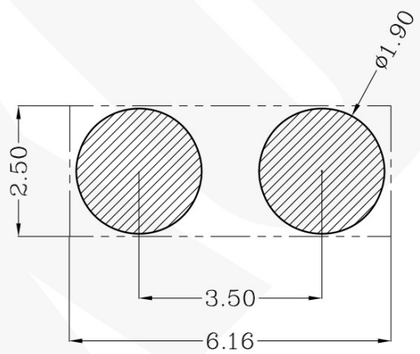

Recommended PCB Layout

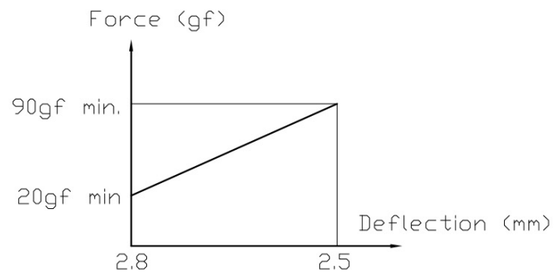

Notes:
1 Material, Housing: PA 4.6 (30% Glass Filled)
Color Black.
Contact: Brass
2 Mechanical demands:
Plating Plunger: 0.4um Au over 1.4um Ni
Plating Body: 0.1um Au over 1.4um Ni.

100267-2
PART NUMBER

DIMENSIONS IN MM
TOLERANCES UNLESS OTHER SPECIFIED
0 = ±-
0.0 = ±0.15
0.00 = ±0.10
0.000 = ±
ANGLE: ±1°
SURF TEXTURE: 3.2
REMOVE BURRS. BREAK SHARP EDGES R0.05 MAX
DO NOT SCALE PRINT

MATL	HT TR	FIN
1	—	—

DWN	APVD
Qin	
CHK	REL

Pexon

NAME: POGO CONNECTOR 2 POSITIONS PGC-1.5-3.0-R-2P-3.5PH

SCALE		DWG NO.	SHEET	REV
1:1	A4	C-100267	1 OF 1	A

LTR	REVISION RECORD	APVD	DATE
	NEW		2009/09/17

LOC -
DIST -

THIS INFORMATION IS CONFIDENTIAL AND IS DISCLOSED TO YOU ON CONDITION THAT NO FURTHER DISCLOSURE IS MADE BY YOU TO OTHER THAN PEXON PERSONNEL WITHOUT WRITTEN AUTHORIZATION FROM PEXON LTD.

PEXON

E-mail: sale@pinconnector.com

WhatsApp: +86-13361867201

www.pinconnector.com