USED ON
–

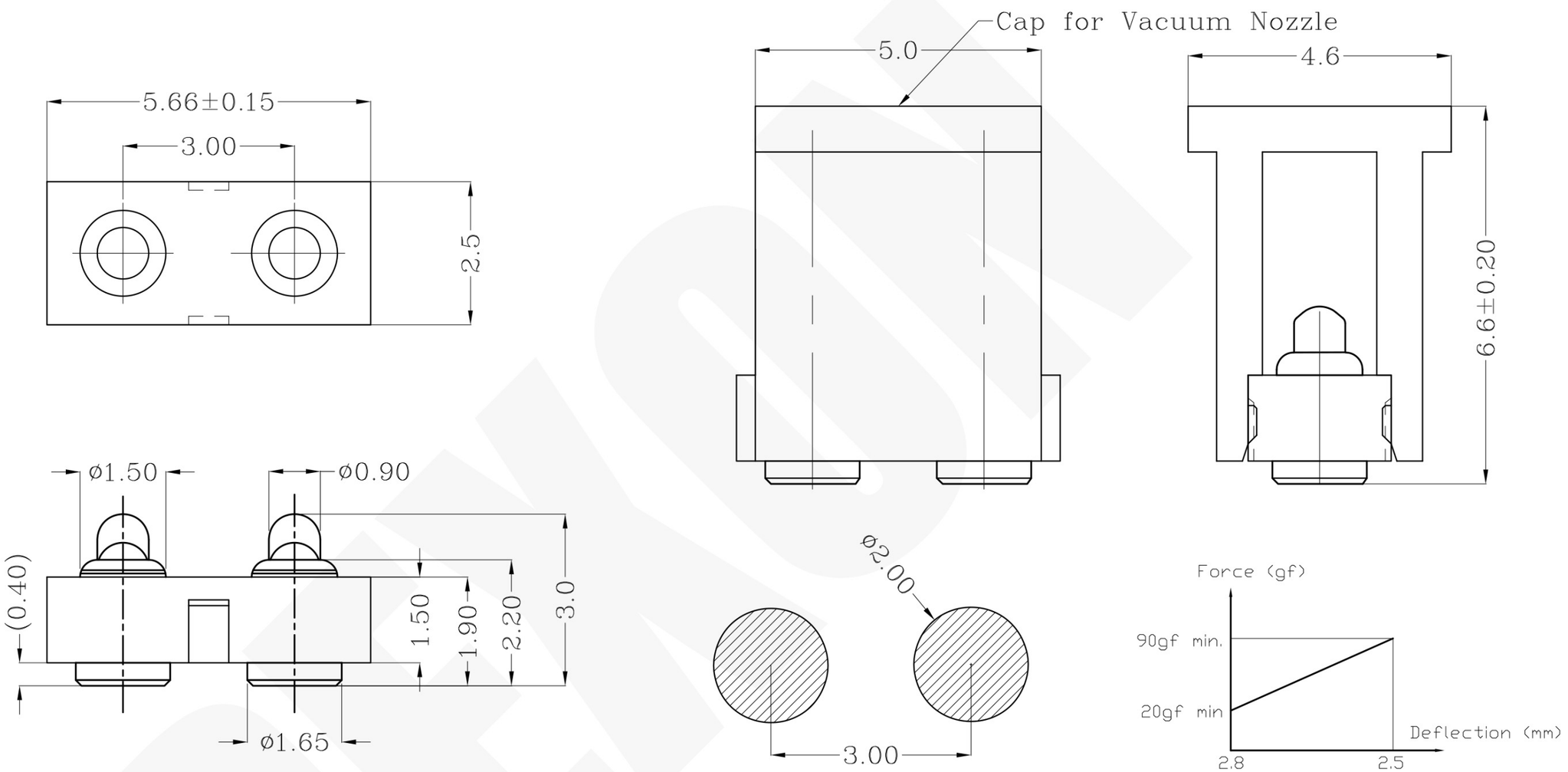

Recommended PCB Layout

Notes:
1 Material, Housing: PA 4.6 (30% Glass Filled)
Color Black.
Contact: Brass
2 Mechanical demands:
Plating Plunger: Min 0.4um Au over 1.4um Ni
Plating Body: Min 0.1um Au over 1.4um Ni.

	NEW		2008/12/16
LTR	REVISION RECORD	APVD	DATE

DIMENSIONS IN MM
TOLERANCES UNLESS OTHER SPECIFIED
0 = ±–
0.0 = ±0.15
0.00 = ±0.10
0.000 = ±
ANGLE: ±1°
SURF TEXTURE: 3.2
REMOVE BURRS. BREAK SHARP EDGES R0.05 MAX
DO NOT SCALE PRINT

MATL 1		HT TR —	FIN —
DWN Qin	APVD Lansing	Pexon	
CHK Jim	REL		
NAME BATTERY POGO CONNECTOR 2 POSITIONS PGC-1.5-3.0-R-2P-3.0PH			
SCALE 1:1	A4	DWG NO. C-100448	SHEET 1 OF 1	REV A

100448-2
PART NUMBER

DWG NO. C-100448

LOC –
DIST –

THIS INFORMATION IS CONFIDENTIAL AND IS DISCLOSED TO YOU ON CONDITION THAT NO FURTHER DISCLOSURE IS MADE BY YOU TO OTHER THAN PEXON PERSONNEL WITHOUT WRITTEN AUTHORIZATION FROM PEXON LTD.

PEXON

E-mail: sale@pinconnector.com

WhatsApp: +86-13361867201

www.pinconnector.com