USED ON
–

DWG NO. C-100442

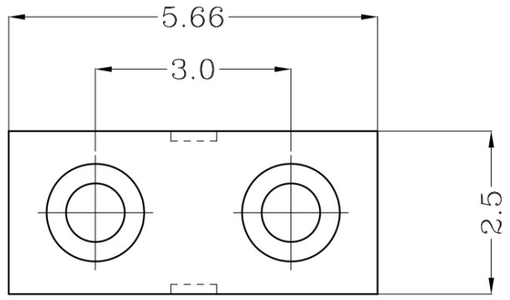

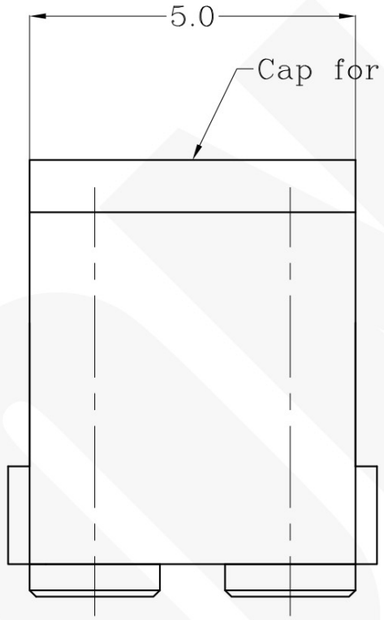

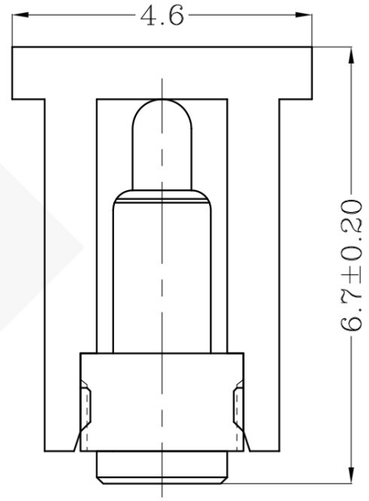

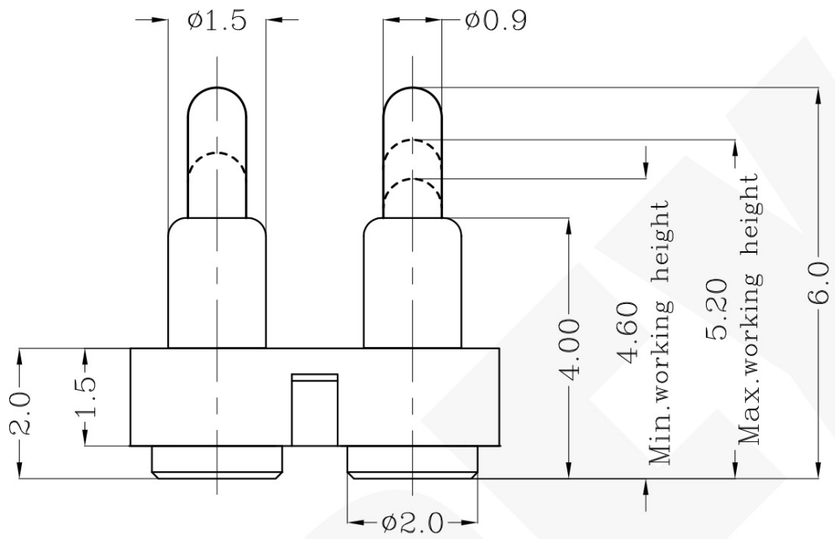

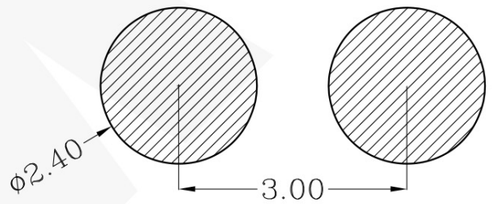

Recommended PCB Layout

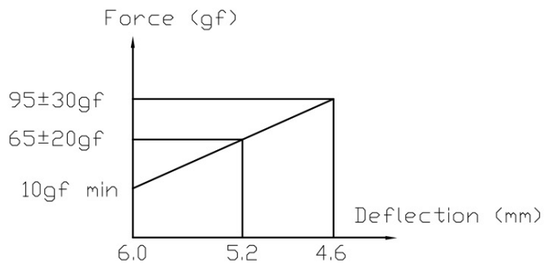

Notes:
1 Material, Housing: PA 4.6 (30% Glass Filled)
Color Black.
Contact: Brass
2 Mechanical demands:
Plating Plunger: Min 0.4Um Au over 1.4um Ni
Plating Body: Min 0.1Um Au over 1.4um .

LTR	REVISION RECORD	APVD	DATE
	NEW		10/05/11

DIMENSIONS IN MM
TOLERANCES UNLESS OTHER SPECIFIED
0 = ±–
0.0 = ±0.15
0.00 = ±0.10
0.000 = ±–
ANGLE: ±1°
SURF TEXTURE: 3.2
REMOVE BURRS. BREAK SHARP EDGES R0.05 MAX
DO NOT SCALE PRINT

MATL 1	HT TR —	FIN —	100442-2 PART NUMBER
DWN Qin	APVD	Pexon	
CHK	REL		
NAME POGO CONNECTOR 2 POSITIONS PGC-1.5-6.0-R-2P-3.0PH			
SCALE 1:1	A4	DWG NO. C-100442	SHEET 1 OF 1	REV A

LOC –
DIST –

THIS INFORMATION IS CONFIDENTIAL AND IS DISCLOSED TO YOU ON CONDITION THAT NO FURTHER DISCLOSURE IS MADE BY YOU TO OTHER THAN PEXON PERSONNEL WITHOUT WRITTEN AUTHORIZATION FROM PEXON LTD.

PEXON

E-mail: sale@pinconnector.com

WhatsApp: +86-13361867201

www.pinconnector.com