THIS INFORMATION IS CONFIDENTIAL AND IS DISCLOSED TO YOU ON CONDITION THAT NO FURTHER DISCLOSURE IS MADE BY YOU TO OTHER THAN PEXON PERSONNEL
WITHOUT WRITTEN AUTHORIZATION FROM PEXON LTD.

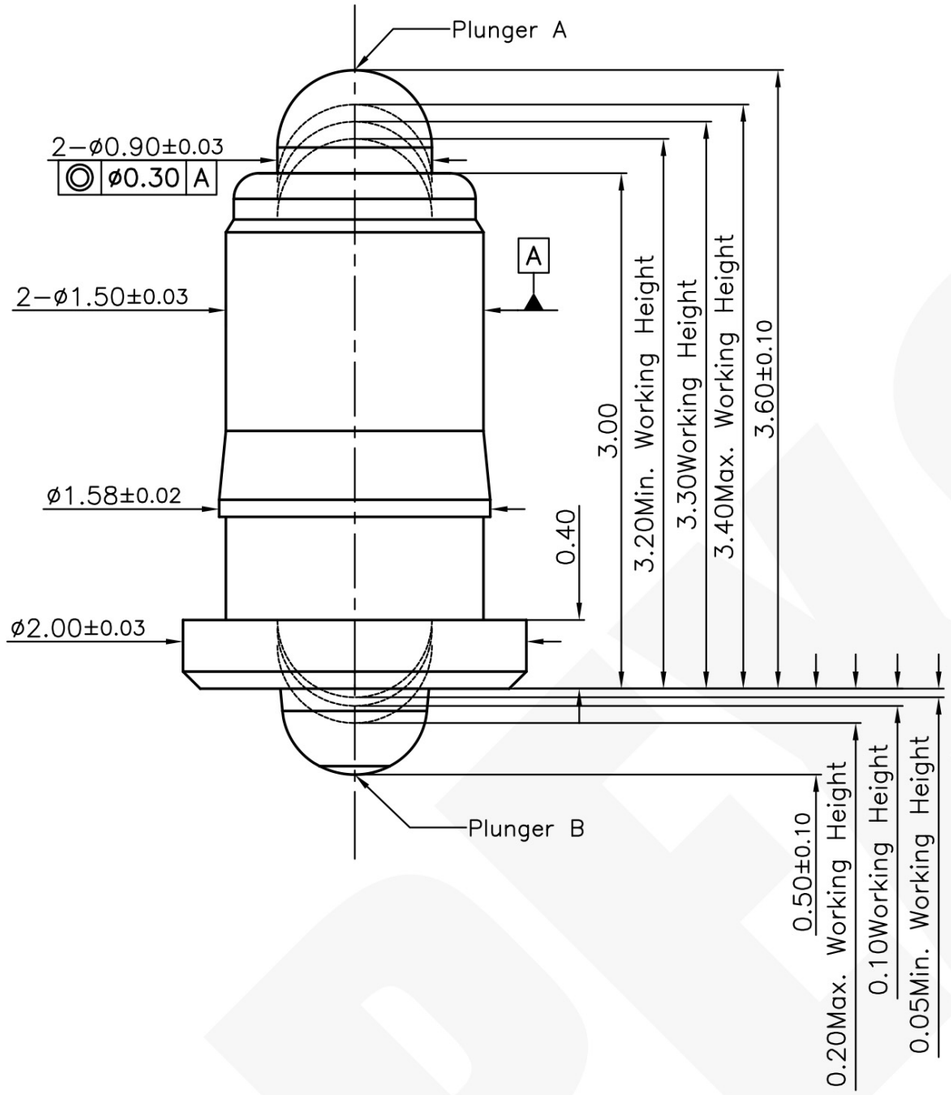

Notes:
1 Dimensions shall be interpreted per ASME Y14.5M
2 Mechanical performance(See the table 1)
<2.1>The force is the average of forces obtained when plunger goes downwards and upwards
<2.2>Warning:Working height are not permitted to be less than Min working height
3 Electrical performance
<3.1>Current rating: 2.0A
<3.2>Voltage rating: 36VAC/DC
<3.3>Dynamic Resistance:30mOhm Max (between max and min working height)
4 Environmental performance
<4.1>Operating Temperature range:−40°C~+85°C
<4.2>Withstanding High Temperature:260°C/10Sec
5 Environmental protection requirement
<5.1>RoHS compliant
6 Packaging:Bag.

Table 1:Mechanical performance		
Working Height	Plunger A at 3.30 meanwhile Plunger B at 0.10	75±20gf
Durability	10000 Cycles Min.	

Item	Part Name	Q'TY	Material	Finish
4	Body	1pcs	Leaded Brass	Au 0.1um min plated over 1.4um min Ni
3	Plunger A	1pcs	Leaded Brass	Au 0.75um min; over 1.4um min Ni
2	Plunger B	1pcs	Leaded Brass	Au 0.4um min plated over 1.4um min Ni
1	Spring	1pcs	Stainless steel wire	--------

Item	Revision record	Date
XB	Design change	2017.04.21
XA	New Release	2017.02.08

Top−Link Electronics Ltd.

TOLERANCES UNLESS OTHER SPECIFIED
0. = ± −
0.0 = ± 0.15
0.00 = ± 0.10
0.000= ± −
Angle: ±1°
SURF TEXTURE: REMOVE BURRS. BREAK SHARP EDGES R0.05 MAX.DO NOT SCALE PRINT.

Type: Customer drawing		Unit: mm	Pexon
DRW: Neil	APRD: Alex		
CHK: Kent	REL:		
Name: Pogo Pin			
Scale: 1:1	Size: A4	Part NO.: 20101011727	Page: 1/1	Rev: XB

PEXON

E-mail: sale@pinconnector.com

WhatsApp: +86-13361867201

www.pinconnector.com