USED ON
—

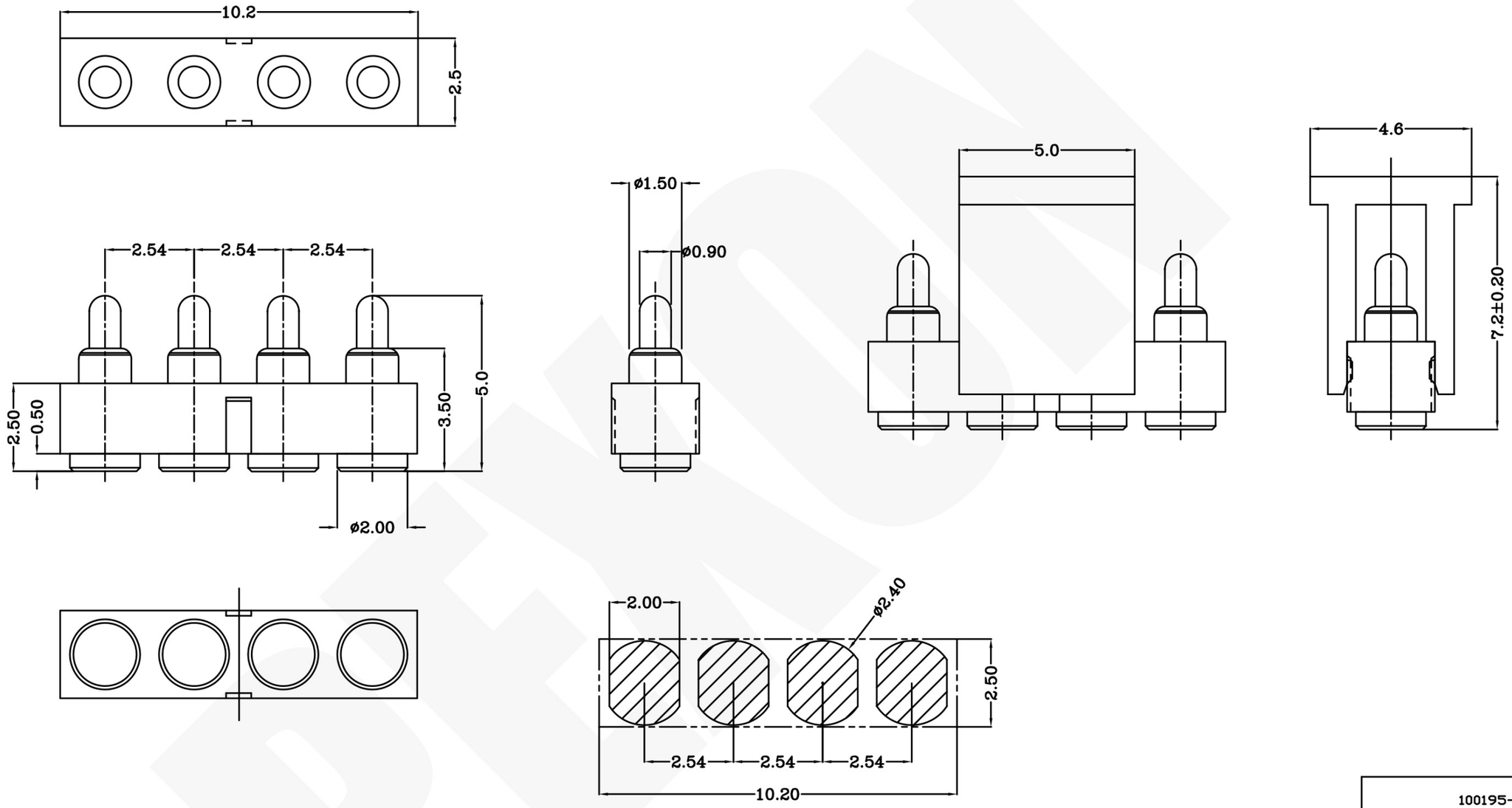

Recommended PCB Layout

Notes:
1 Material, Housing: PA 4.6 (30% Glass Filled)
Color Black.
Contact: Brass
2 Mechanical demands:
Plating Plunger: 0.4um Au over 1.25um Ni
Plating Body: 0.1um Au over 1.25um Ni.
Full stroke: 1.4mm

LTR	REVISION RECORD	APVD	DATE
	update remark		2007/12/27

DIMENSIONS IN MM
TOLERANCES UNLESS
OTHER SPECIFIED
0 = ±-
0.0 = ±0.15
0.00 = ± 0.10
0.000 = ±
ANGLE: ±1°
SURF TEXTURE: 3.2
REMOVE BURRS, BREAK
SHARP EDGES R0.05 MAX
DO NOT SCALE PRINT

MATL 1	HT TR —	FIN —	
DWN Benny	APVD	Pexon	
CHK	REL		
NAME BATTERY POGO CONNECTOR 4 POSITIONS PGC-1.5-5.0-R-4P-2.54PH			
SCALE 1:1	A4	DWG NO. C-100195	SHEET 1 OF 1 / REV B

100195-4
PART NUMBER

DWG NO. C-100195

LOC -
DIST -

THIS INFORMATION IS CONFIDENTIAL AND IS DISCLOSED TO YOU ON CONDITION THAT NO FURTHER DISCLOSURE IS MADE BY YOU TO OTHER THAN PEXON PERSONNEL WITHOUT WRITTEN AUTHORIZATION FROM PEXON LTD.

D C B A

4 3 2 1

PEXON

E-mail: sale@pinconnector.com

WhatsApp: +86-13361867201

www.pinconnector.com