USED ON
—

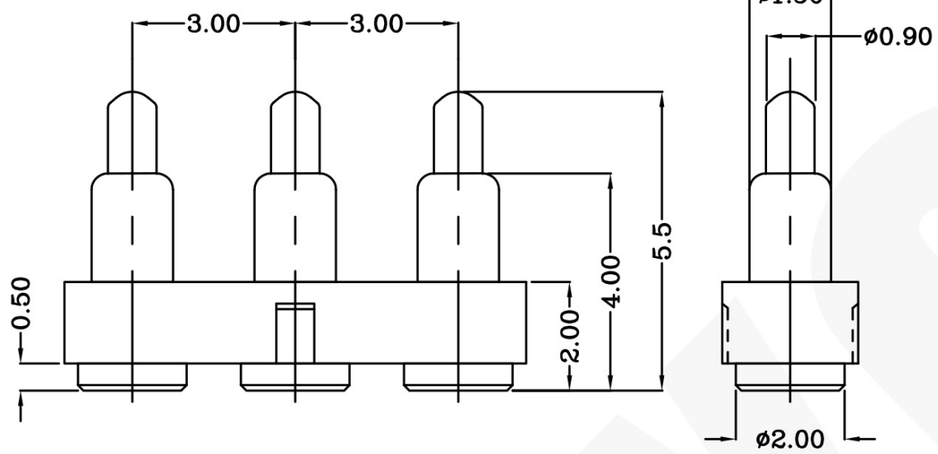

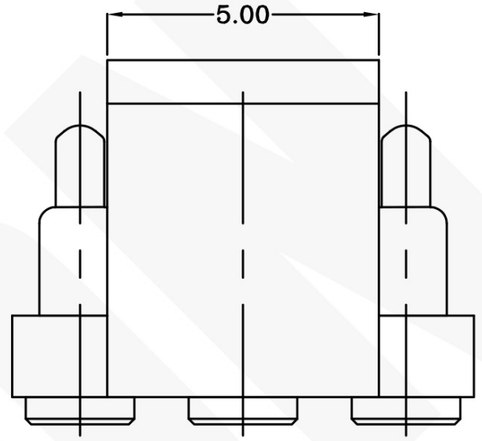

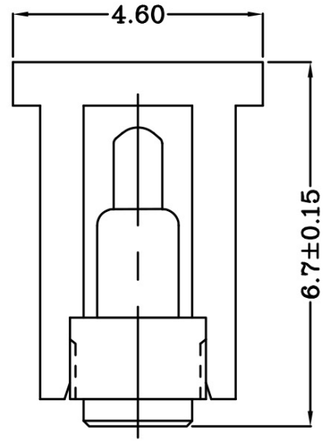

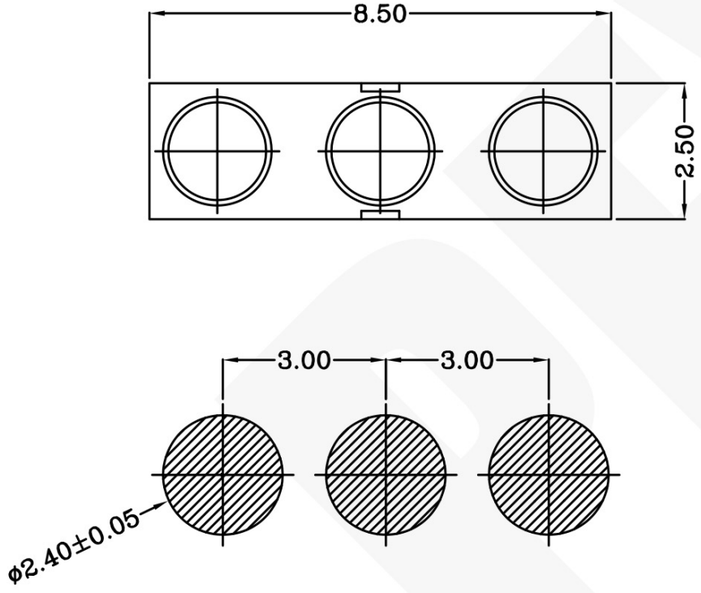

Recommended PCB Layout

Notes:

1 Material, Housing: PA 4.6 (30% Glass Filled)
Color Black.
Contact: Brass

2 Mechanical demands:
1)Plating Plunger: 0.4um Au over 1.4um Ni
2)Plating Body: 0.1um Au over 1.4um Ni.

3 Mechanic:
1)Force: 30±15gf per pin at 1.0mm stroke
2)Total stroke : 1.40mm
3)Durability: 10,000 cycle min.

4 Electrical
1)Contact resistance: 30mOhm Max.
2)Voltage rating: 36V DC Max
3)Current rating: 2.0A

100601-3
PART NUMBER

DWG NO. C-100601

THIS INFORMATION IS CONFIDENTIAL AND IS DISCLOSED TO YOU ON CONDITION THAT NO FURTHER DISCLOSURE IS MADE BY YOU TO OTHER THAN PEXON PERSONNEL WITHOUT WRITTEN AUTHORIZATION FROM PEXON LTD.

LTR	REVISION RECORD	APVD	DATE
	Renovate		2010/05/27
	NEW		2010/05/13

DIMENSIONS IN MM
TOLERANCES UNLESS OTHER SPECIFIED
0 = ±-
0.0 = ±0.10
0.00 = ±0.10
0.000 = ±
ANGLE: ±1°
SURF TEXTURE: 3.2
REMOVE BURRS. BREAK SHARP EDGES R0.05 MAX
DO NOT SCALE PRINT

MATL 1	HT TR —	FIN —	
DWN Qin	APVD	Pexon	
CHK	REL		
NAME POGO 3P PGC-1.5-5.5-R-3P-3.0PH			
SCALE 1:1	A4	DWG NO. C-100601	SHEET 1 OF 1	REV 2

LOC -
DIST -

PEXON

E-mail: sale@pinconnector.com

WhatsApp: +86-13361867201

www.pinconnector.com