USED ON
—

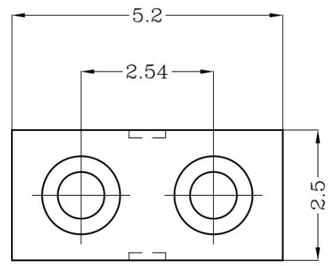

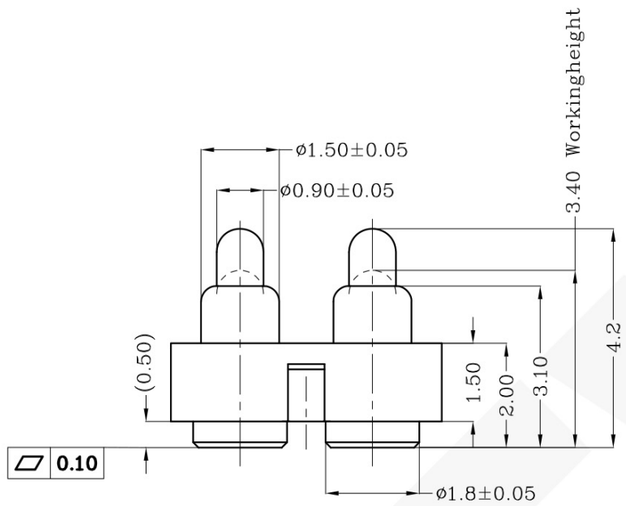

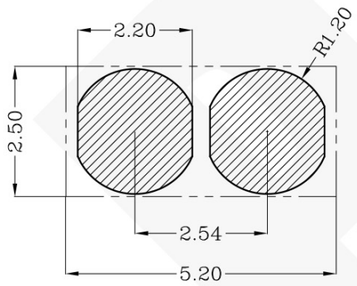

Recommended PCB Layout

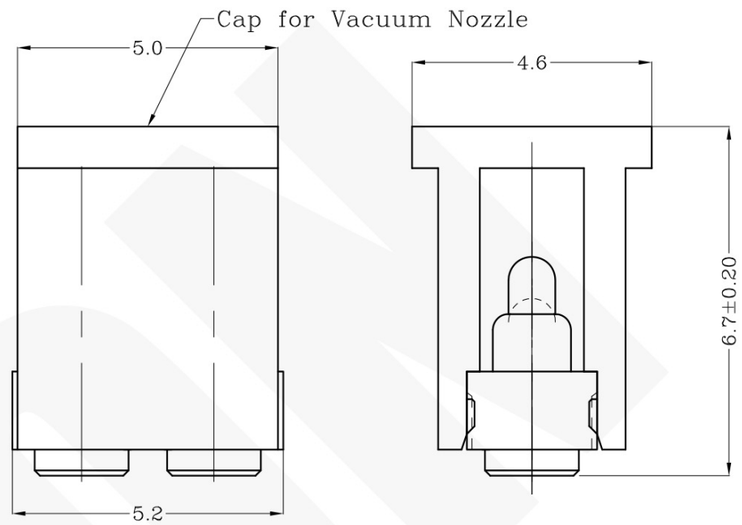

Notes:

1 Material(材质):
Housing: PA 4.6 (30% Glass Filled)Color Black.
Contact: Brass
Spring: Stainless steel wire

2 Plating:
Body: Min 0.1um Gold plating over min. 1.4um Nickel plating
(Body: 镀金0.1um Min 镍底1.4um Min)
Plunger: Min 0.4um Gold plating over min. 1.4um Nickel plating
(Plunger: 镀金0.4um Min 镍底1.4um Min)

3 Mechanical:
Force: 110±25gf per pin at 0.8mm stroke
(力:下压0.8mm的力:110±25gf)
Total stroke(总行程): 1.10mm
Durability(寿命): 10,000 cycle min.

4 Electrical(电性能)
Contact resistance(接触抵抗): 30mOhm Max.
Voltage rating(额定电压): 36V DC Max
Current rating(额定电流): 2.0A

100564-2
PART NUMBER

DIMENSIONS IN MM
TOLERANCES UNLESS OTHER SPECIFIED
0 = ±-
0.0 = ±0.15
0.00 = ±0.10
0.000 = ±
ANGLE: ±1°
SURF TEXTURE: 3.2
REMOVE BURRS. BREAK SHARP EDGES R0.05 MAX
DO NOT SCALE PRINT

MATL 1	HT TR —	FIN —
DWN Qin	APVD	Pexon
CHK	REL	
NAME BATTERY POGO CONNECTOR 2 POSITIONS PGC-1.5-4.2-R-2P-2.54PH		
SCALE 1:1	A4	DWG NO. C-100564	SHEET 1 OF 1	REV 1

LTR	REVISION RECORD	APVD	DATE
	NEW		2009/11/11

LOC -
DIST -

DWG NO. C-100564

THIS INFORMATION IS CONFIDENTIAL AND IS DISCLOSED TO YOU ON CONDITION THAT NO FURTHER DISCLOSURE IS MADE BY YOU TO OTHER THAN PEXON PERSONNEL WITHOUT WRITTEN AUTHORIZATION FROM PEXON LTD.

D C B A

4 3 2 1

PEXON

E-mail: sale@pinconnector.com

WhatsApp: +86-13361867201

www.pinconnector.com