USED ON
—

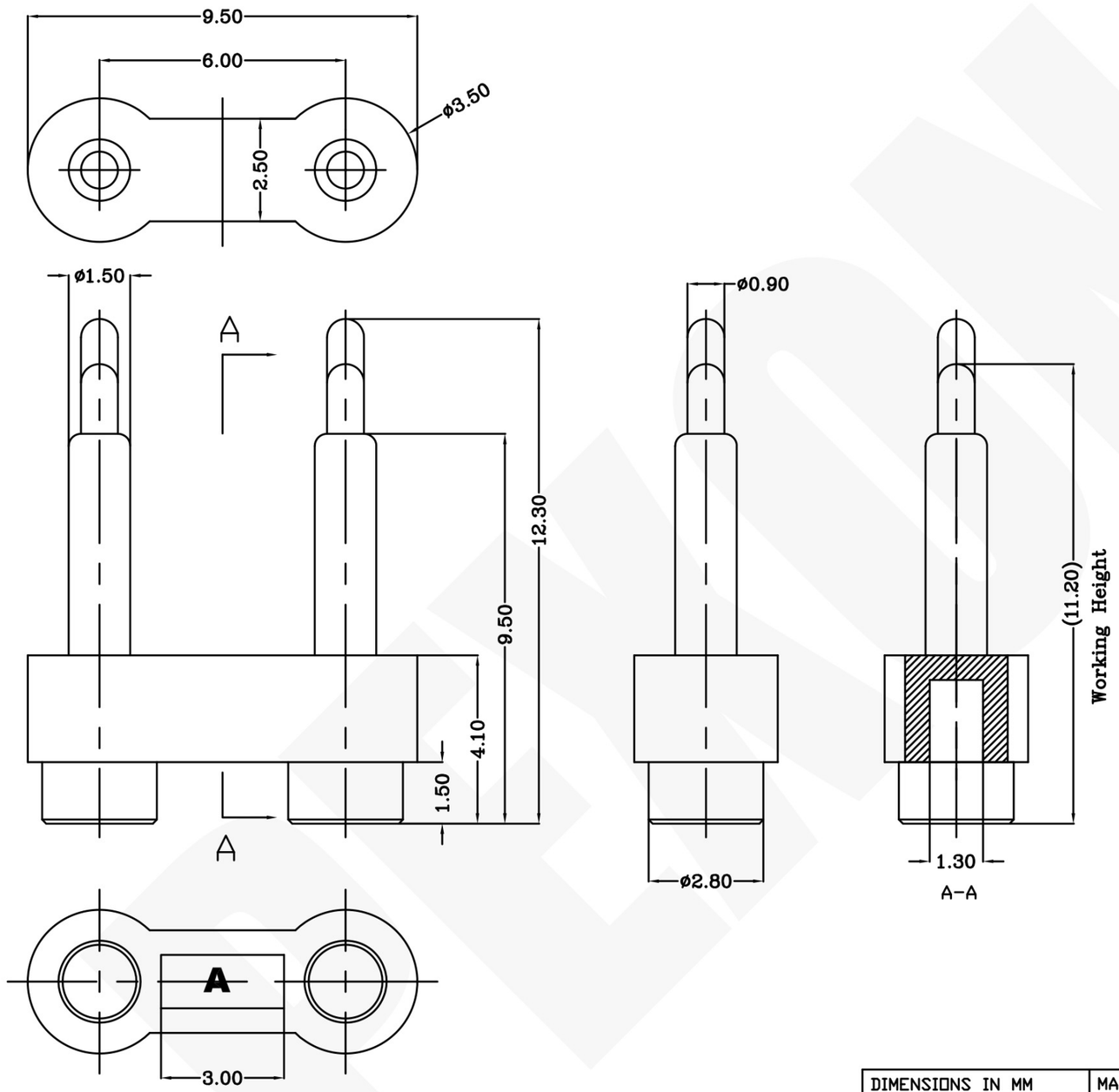

Notes:
1 Material, Housing: PA 4.6 (30% Glass Filled)
Color Black.
Contact: Brass
2 Mechanical demands:
Spring force: Min 0.2N with 0.5mm stroke
Min 1.1 with 1.1mm stroke.
Full stroke: 2.5mm
Plating Plunger: 0.4um Au over 1.4um Ni
Plating Body: 0.1um Au over 1.4um Ni.

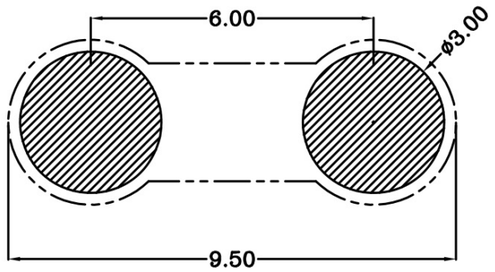

Recommended PCB Layout

DWG NO. C-100054

THIS INFORMATION IS CONFIDENTIAL AND IS DISCLOSED TO YOU ON CONDITION THAT NO FURTHER DISCLOSURE IS MADE BY YOU TO OTHER THAN PEXON PERSONNEL WITHOUT WRITTEN AUTHORIZATION FROM PEXON LTD.

LOC	DIST
-	-

LTR	REVISION RECORD	APVD	DATE
	NEW		2007/09/07

DIMENSIONS IN MM
TOLERANCES UNLESS OTHER SPECIFIED
0 = ±-
0.0 = ±0.10
0.00 = ±-
0.000 = ±
ANGLE: ±1°
SURF TEXTURE: 3.2
REMOVE BURRS. BREAK SHARP EDGES R0.05 MAX
DO NOT SCALE PRINT

MATL 1	HT TR —	FIN —
DWN Benny	APVD Lansing	Pexon
CHK Andy	REL	

NAME BATTERY POGO CONNECTOR 2 POSITIONS PGC-1.5-12.3-R-2P-6.0PH

SCALE		DWG NO.	SHEET	REV
1:1	A4	C-100054	1 OF 1	A

100054-2
PART NUMBER

PEXON

E-mail: sale@pinconnector.com

WhatsApp: +86-13361867201

www.pinconnector.com