Item	Part name	Q'ty/Ea'	Material	Finish
1	HSG	1	High temp.Plastic UL94 V-0 Color Black	————
2	Body	4	Leaded Brass	Gold plating over Nickel plating
3	Plunger	4	Leaded Brass	Gold plating over Nickel plating
4	Spring	4	Stainless steel wire	————
5				

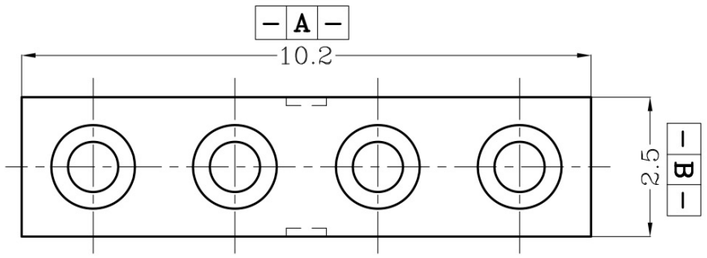

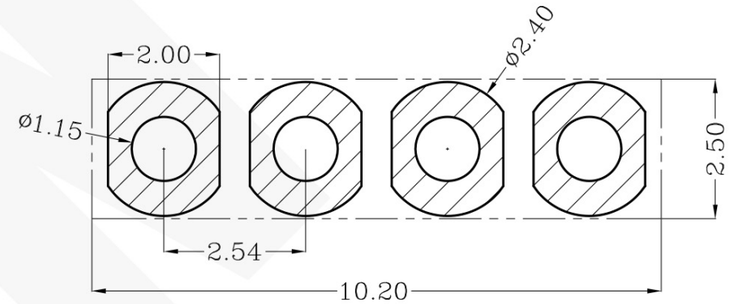

Recommended PCB Layout

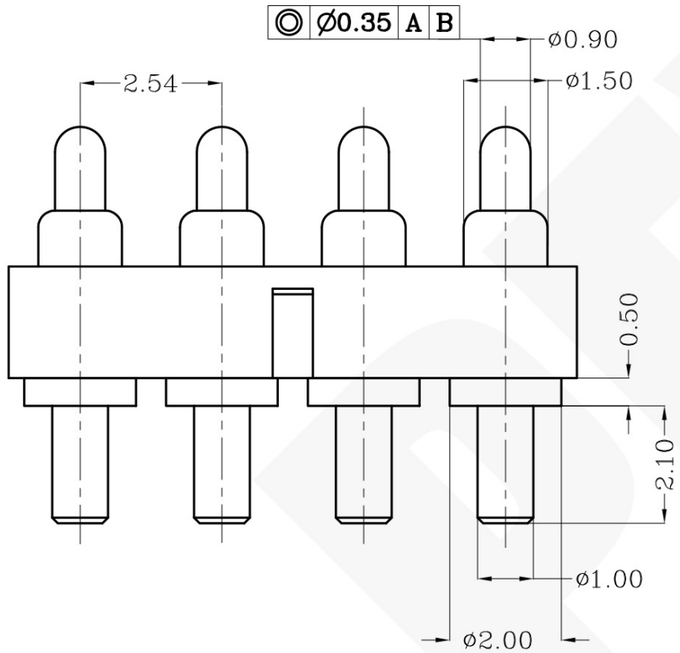

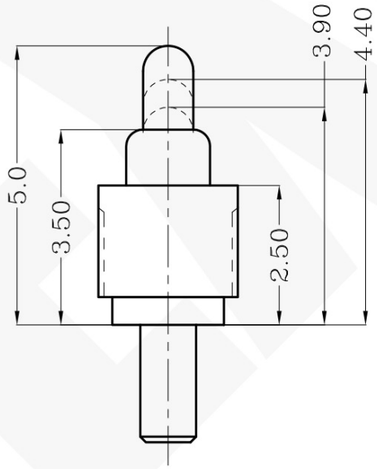

Table 1 Mechanical performance		
Max.working height	4.40mm	85±25gf <2.1>
Min.working height	3.90mm	150±35gf
Durability	10000cycle	

Notes:

1 Demensions shall be interpreted per ASME Y14.5M.

2 Mechanical performance(See the table 1)

<2.1>The force is the average of forces obtained when plunger goes downwards and upwards.

<2.2>Warning: Working height are not permitted to be less than Min working height.

3 Electrical performance

Resistance: 30mOhm Max.Current rating: 2.0A

4 RoHS compliant.

	NEW	2012/05/02
Rev.	Revision record.	Date.

Top-Link Electronics Ltd.

TOLERANCES UNLESS OTHER SPECIFIED
0. = ± –
0.0 = ± 0.15
0.00 = ± 0.10
0.000= ± –
Angle: ±1°
SURF TEXTURE: REMOVE BURRS. BREAK SHARP EDGES R0.05 MAX.DO NOT SCALE PRINT.

Type: Customer drawing		Unit: mm	Weight
DWN: Qin Zuozhong	APVD:	Pexon	
CHK:	REL:		
Name: Customer drawing			
Scale: 1:1	Size: A4	DWG No.: C-110812	Page: 1/1	Rev.: A

110812-4

PART NUMBER

DWN No.: C-110812

DIST ———

DIST ———

THIS INFORMATION IS CONFIDENTIAL AND IS DISCLOSED TO YOU ON CONDITION THAT NO FURTHER DISCLOSURE IS MADE BY YOU TO OTHER THAN PEXON PERSONNEL WITHOUT WRITTEN AUTHORIZATION FROM PEXON LTD.

PEXON

E-mail: sale@pinconnector.com

WhatsApp: +86-13361867201

www.pinconnector.com